PACKAGE OUTLINE

DO- 5 (DO-203AB)

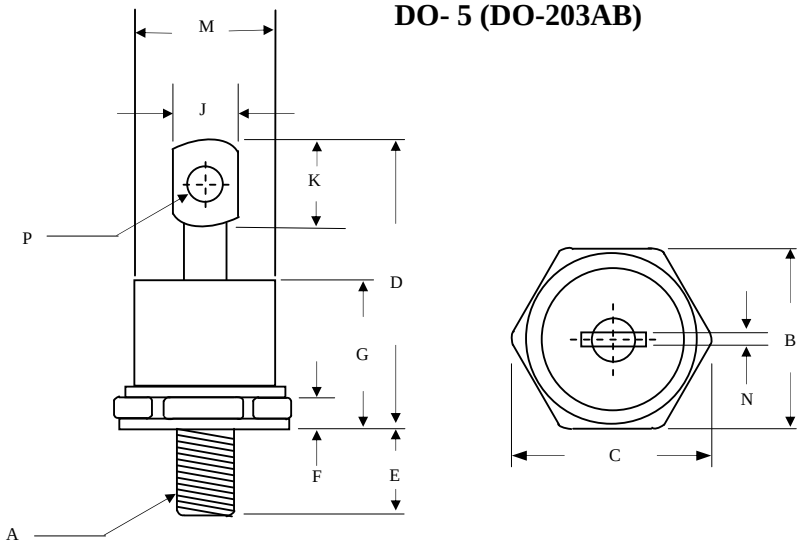

	Inches		Millimeters	
	Min	Max	Min	Max
A	1/4 –28			
B	0.669	0.687	17.19	17.44
C	-----	0.794	-----	20.16
D	-----	1.020	-----	25.91
E	0.422	0.453	10.72	11.50
F	0.115	0.200	2.93	5.08
G	-----	0.460	-----	11.68
J	-----	0.280	-----	7.00
K	0.315	-----	8.00	-----
M	-----	0.589	-----	14.96
N	-----	0.043	-----	1.10
P	0.140	0.175	3.56	4.45

Dimensions in inches and (millimeters)